Theory and Practice of Science and Technology
2026, VOL. 7, NO. 2, 82-86
DOI: 10.47297/taposatWSP2633-456916.20260702

Design of a Multifunctional Environmental Perception LED Control System Based on the IAP15F2K61S2 Microcontroller

Jinqiu Dong

School of Electronics and Information Engineering, Liaoning Technical University, Huludao, Liaoning, 125105, China

ABSTRACT
To address the problems of traditional LED control systems, such as single functionality, lack of environmental perception linkage capability, and insufficient human – computer interaction, this paper proposes and implements a multifunctional environmental sensing LED control system based on the IAP15F2K61S2 microcontroller. The system takes the microcontroller as the core controller and integrates a dual-color LED array, a 0.96-inch OLED display, a light intensity sensor module, and a DHT11 temperature and humidity sensor. It realizes three core functions: dynamic LED flashing mode control, environmental illumination threshold linkage response, and temperature over-limit alarm. Meanwhile, serial communication is employed to complete command interaction with the host computer, and the OLED display provides real-time feedback on the system operating status. In the design process, the hardware architecture was constructed, circuit schematics were developed, and PCB layout design and fabrication were completed. Modular programming was adopted to implement the software logic, followed by hardware soldering and functional debugging. Experimental results show that the system can stably achieve switching among eight LED flashing modes, accurately sense illumination and temperature, and perform corresponding linkage control. The OLED display operates in real time without garbled characters, and the serial commands respond quickly. The overall system features low power consumption, stable operation, and user-friendly human–computer interaction, providing a feasible design reference for embedded environmental sensing and intelligent lighting control systems.

KEYWORDS
IAP15F2K61S2 microcontroller; LED control; Environmental sensing; Light detection; Temperature threshold alarm

1 Introduction

With the rapid development of the Internet of Things (IoT) and embedded technologies, intelligent lighting and environmental sensing systems have been widely applied in fields such as smart homes, industrial monitoring, and campus security. Existing studies on smart home monitoring systems and intelligent agricultural greenhouse monitoring systems demonstrate the integration trend of environmental perception and intelligent control. However, traditional LED control systems still exhibit significant limitations. Most of them only provide basic functions such as simple on/off or flashing control, lacking linkage response with environmental parameters and offering limited human – computer interaction methods, which makes them difficult to meet the requirements of intelligent and multifunctional applications [1-3].

Previous studies on illumination measurement systems have pointed out that single-function LED control can no longer adapt to complex environmental monitoring scenarios. In related research, some designs have achieved linkage between LEDs and a single sensor. For instance, certain intelligent street lighting systems only realize the linkage between illumination and LEDs, while other lighting management systems suffer from issues such as inflexible mode switching, limited environmental parameter monitoring, and non-intuitive status feedback [4-5]. In addition, some embedded lighting systems possess multiple functions, but their hardware architectures are relatively complex, with higher power consumption and complicated control logic [6-7].

To address these limitations, this paper designs a multifunctional environmental sensing LED control system based on the IAP15F2K61S2 microcontroller. This microcontroller, belonging to the STC series with an 8051 core, features high cost performance, low power consumption, abundant I/O interfaces, and a built-in UART module, which can effectively support multiple peripheral devices and serial communication. To overcome the shortcomings of existing designs, the proposed system integrates both illumination and temperature – humidity sensors, enabling linkage control between LEDs and dual environmental parameters, thereby overcoming the limitations of single-sensor linkage. Meanwhile, eight preset flashing modes are designed for eight groups of dual-color LEDs. Remote command control from a host computer is realized through serial communication, and a 0.96-inch OLED display is employed to provide real-time visualization of the system operating mode and environmental parameters, thus improving the intuitiveness of status feedback.

The design optimizes the compactness of the hardware architecture and adopts a modular software structure. The system implementation includes schematic design, PCB fabrication, and hardware debugging. Compared with existing designs, the proposed system features multi-mode LED control, multi-parameter environmental sensing, user-friendly interaction, and low power consumption. In addition, it has low hardware cost and good scalability, providing a practical reference for engineering applications of intelligent environmental sensing LED control systems [8].

2 Design of the System Modules

The multifunctional environmental sensing LED control system takes the IAP15F2K61S2 microcontroller as the core control unit. The overall system consists of six functional modules: the microcontroller main control module, dual-color LED driving module, OLED display module, environmental sensor module, power supply and auxiliary module, and software control module.

After power-on, the system initializes each hardware module. The working mode can be switched through serial commands, while environmental illumination, temperature, and humidity data are collected in real time. After processing by the microcontroller, the system realizes several functions, including LED flashing mode control, illumination threshold-based linkage for LED on/off control, and synchronous flashing alarm when the temperature exceeds the preset limit. Meanwhile, the OLED display continuously updates the current working mode, environmental parameters, and LED status in real time.

The circuit connections among the modules are well organized, and the software logic adopts a modular design to ensure coordinated system operation and timely response. The overall system architecture and signal flow are shown in Figure 1.

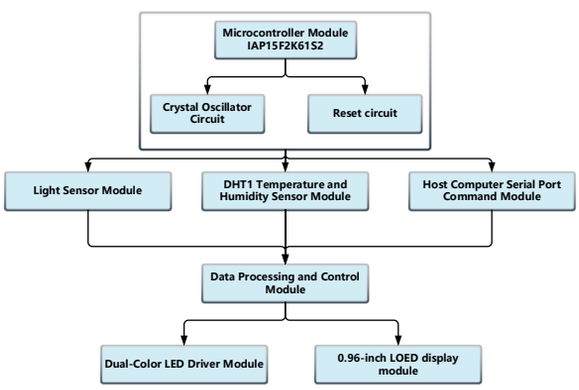

Figure 1 Block Diagram of the Multifunctional Environment-Aware LED Control System

Each module performs a specific function within the system, ensuring the overall system's efficient operation and stability. The following provides a detailed design and analysis of each module.

2.1 Microcontroller Module

The microcontroller-based main control module, centered around the IAP15F2K61S2, handles core system scheduling and control tasks. It is primarily responsible for key operations such as environmental parameter acquisition, threshold detection, serial command parsing and processing, and LED driver control. To ensure seamless coordination among all modules, the module allocates I/O ports according to the functional requirements of each peripheral, establishing stable communication with the environmental sensor, LED driver module, and OLED display module to ensure real-time data transmission and efficient command execution. Additionally, the module incorporates an external crystal oscillator, a reset circuit, and matching resistors. The external crystal oscillator provides a stable clock signal to the microcontroller, the reset circuit ensures rapid recovery to normal operation in the event of system anomalies, and the matching resistors optimize signal transmission quality. Collectively, these components enhance the microcontroller's operational stability and interference resistance, providing reliable support for the implementation of all system functions.

2.2 Dual-Color LED Driver Module

The LED driver module uses eight sets of red-green dual-color LEDs, which are driven directly by the microcontroller's I/O ports. Each set of LEDs is controlled independently, and a 220Ω current-limiting resistor is connected in series to ensure safety. Working in conjunction with the main control and sensor modules, this module enables multi-mode LED flashing, synchronized on/off functions, and temperature alarm capabilities, offering reliable control and rapid response.

2.3 OLED display module

The OLED display module features a 0.96-inch screen driven by the SSD1306. The microcontroller uses software to emulate I^2C communication for data refresh, displaying real-time information on light levels, temperature and humidity, LED operating modes, and temperature thresholds. This ensures accurate, real-time data and enhances system interactivity.

2.4 Environmental Sensor Module

The environmental sensor module serves as the system's data acquisition unit. It comprises two submodules—a light sensor and a DHT11 temperature and humidity sensor—which are responsible for collecting real-time data on ambient

light intensity and temperature/humidity levels, thereby providing the basis for LED control. Both submodules communicate with the microcontroller via digital signals, ensuring accurate data collection and prompt response. The light sensor uses a photoresistor combined with an LM393 digital module. Its DO pin is connected to the microcontroller's P2.0 pin, and it feeds back light conditions via high and low logic levels, enabling the microcontroller to control the LED's on/off state; The DHT11 communicates via I2C; its DATA pin is connected to the microcontroller's P4.4. It collects integer data for temperature and humidity. After parsing the data, the microcontroller determines whether the temperature exceeds the threshold, triggers an LED alarm, and transmits the data to the OLED display. The data collection cycle is set to 1 second to balance real-time performance and system efficiency.

2.5 Power Supply and Auxiliary Modules

The power supply and auxiliary modules provide essential support for the system. They utilize a Type-C interface for power delivery and include a 5V/3.3V conversion module to meet the power requirements of all components. Filter capacitors and matching resistors ensure stable power delivery and high signal quality, while integrated serial port download functionality and reserved button interfaces enhance system flexibility.

3 Operation and Analysis of Results

After completing the system hardware fabrication and software programming, we proceeded with circuit schematic verification, PCB layout design and fabrication, and physical assembly and debugging. Functional testing was conducted to verify the operational stability and interoperability of each module, while quantitative testing was performed on the system's core performance metrics. Testing covers five key areas: LED pattern switching, light detection and control, temperature monitoring and alarms, OLED display, and serial port command response. These tests verify whether the system meets design requirements. A detailed analysis is provided below, combining hardware implementation with physical test results.

3.1 Hardware Implementation and Verification

Hardware implementation serves as the foundation for realizing the system functions. In this design, the circuit schematic drawing, PCB layout design, and fabrication were completed using Lichuang EDA software. After strict verification, component soldering was carried out to ensure a reasonable hardware architecture and accurate circuit connections, thereby providing reliable support for subsequent physical testing.

The hardware verification mainly focuses on the following aspects:

(1) Schematic verification: The circuit connections of each module were checked one by one. The parameters of the 220 Ω current-limiting resistors used for the dual-color LEDs and the 4.7 kΩ pull-up resistors used for the OLED module were confirmed to be properly matched. The pin connections and supply voltages of the light intensity sensor (3.3 V power supply) and the DHT11 sensor (5 V power supply) were also verified to be correct. In addition, the microcontroller crystal oscillator circuit and reset circuit were confirmed to operate normally, with no incorrect pin connections or parameter mismatches. The schematic diagram is shown in Figure 2.

(2) PCB soldering verification: During the soldering process, strict control was applied to ensure the quality of solder joints and to avoid cold soldering and short circuits. After soldering was completed, a multimeter was used to test the

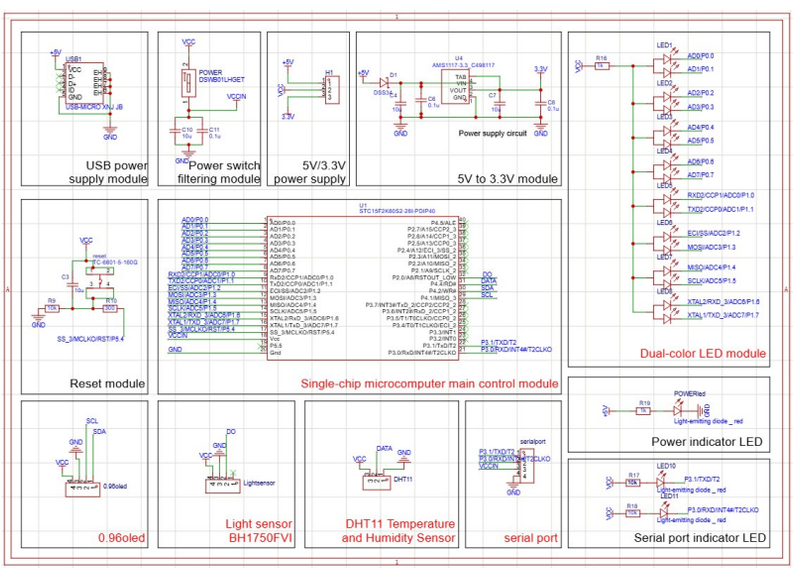

Figure 2 EDA Schematic Diagram

continuity of the power circuits and signal paths. The results confirmed that the power supply for each module was stable and that signal transmission was free of open circuits, indicating that the hardware foundation met the requirements for system testing. The PCB layout is shown in Figure 3.

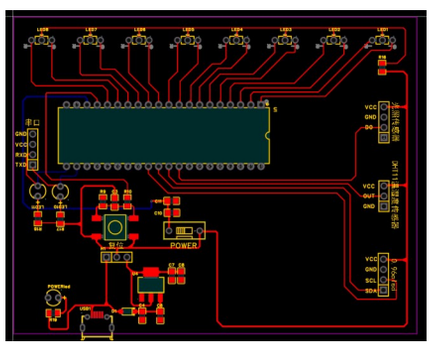

Figure 3 Front view of an unplated PCB

3.2 Analysis of Physical Test Results

In physical testing, the system's actual performance matched the simulation results. Environmental parameters were accurately collected, and the OLED display module reliably updated environmental parameters and system status. Functions such as serial port command interaction, LED control, and alarm notifications all executed smoothly. The system responded promptly and operated stably overall. Figure 4 shows the physical test results.

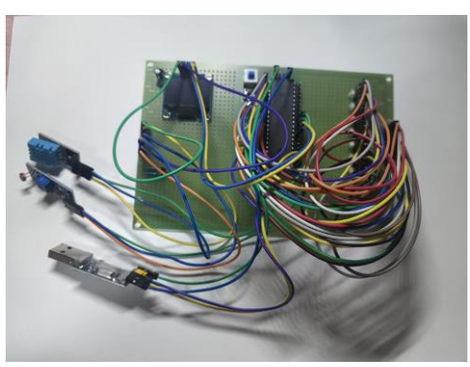

Figure 4 Physical diagram of the environmental awareness LED control system

3.3 Summary of Results Analysis

To verify the design performance of the multifunctional environmental sensing LED control system based on the IAP15F2K61S2 microcontroller, this study conducted quantitative tests on five key system indicators: LED control, sensor data acquisition, OLED display, serial communication, and overall system stability. The test results are presented in Table 1.

Table 1 Performance Test Results for the Multifunctional Environment-Aware LED Control System Based on the IAP15F2K61S2 Microcontroller

Test Category	Quantitative indicators	Test Results	unit	Explanation of Results
LED Control Performance	Pattern switching response time	50	ms	Responsive switching with no lag
LED Control Performance	Success rate of flashing mode implementation	100	%	All 8 patterns have been successfully implemented
LED Control Performance	Temperature Overlimit Flashing Frequency	2	Hz	Uniform flashing frequency, clear alarm
Sensor Performance	Light Detection Threshold Response Delay	30	ms	Light level detection, with timely activation
Sensor Performance	Average error in temperature measurement	0.5	℃	The temperature readings are accurate
Sensor Performance	Average error in humidity measurement	1	%RH	The humidity measurement results meet the requirements.
OLED Display Performance	Display refresh rate	1	s	Synchronized with the sampling cycle, ensuring real-time performance
OLED Display Performance	Display stability rate	100	%	No garbled text, no flickering, no black screen
Serial Communication Performance	Command recognition success rate	100	%	All commands can be accurately recognized
Serial Communication Performance	Average response time for commands	40	ms	The serial port responds quickly and smoothly, with no lag
System Stability	Continuous operating time	72	h	No crashes, no lag
System Stability	Number of exception triggers	0	time	No false alarms, no hardware malfunctions
System power consumption	Standby power consumption	80	mA	Low power consumption, suitable for embedded applications
System power consumption	Power consumption with all LEDs on	200	mA	Moderate power consumption and stable power supply

Based on the simulation and physical test results, together with the system performance data shown in Table 1, it can be concluded that the designed multifunctional environmental sensing LED control system based on the IAP15F2K61S2 microcontroller can stably realize functions such as environmental parameter monitoring, multi-mode LED control, linkage alarm, and status display.

The average temperature acquisition error of the system is 0.5 °C, while the average humidity acquisition error is 1% RH, indicating that the system can reflect environmental changes accurately and in a timely manner. The response time for LED pattern switching is 50 ms, and the average response time for serial commands is 40 ms, demonstrating that the system operation is sensitive and the control performance is reliable. In addition, the illumination linkage response delay is 30 ms, and the temperature over-limit alarm logic functions accurately, indicating that the system's linkage control is both timely and effective.

Meanwhile, the system achieved a 100% success rate in continuous operation without any abnormal conditions, confirming that the overall system operates in a stable and reliable manner.

4 Conclusions

This paper completes the design and implementation of a multifunctional environmental sensing LED control system based on the IAP15F2K61S2 microcontroller. The system collects environmental parameters in real time through a light intensity sensor and a DHT11 temperature – humidity sensor. The collected information is displayed through an OLED display module, while commands are transmitted from a host computer via serial communication to realize multiple LED flashing modes, illumination-based linkage on/off control, and temperature over-limit alarm, thereby enabling intelligent linkage between environmental sensing and LED control.

Both Proteus simulation and physical testing verify that each module functions correctly with timely response. Environmental monitoring, command interaction, execution control, and alarm indication all operate stably and reliably. The system features a simple and compact structure and demonstrates practical value for engineering applications.

However, there is still room for improvement in terms of environmental sensing accuracy and functional expansion. The influence of environmental interference on control accuracy has not been completely eliminated. In future work, higher-precision sensors may be adopted, environmental adaptability control can be enhanced, and additional functions such as wireless communication and data recording may be introduced to further improve the system intelligence and application versatility.

References

[1] Wang H, Pumera M. Coordinated behaviors of artificial micro/nanomachines: from mutual interactions to interactions with the environment [J]. Chemical Society Reviews, 2020, 49(10): 3211-3230.

[2] Almeida N, Teixeira A, Silva S, et al. The AM4I architecture and framework for multimodal interaction and its application to smart environments [J]. Sensors, 2019, 19(11): 2587.

[3] Song Y, Li Y, Wang Y, et al. Artificial Intelligence Powered Smart Multimodal Hand - Wearable Systems for Healthcare and Human – Machine Interaction[J]. Advanced Functional Materials, 2026: e32014.

[4] Zhu S, Yu T, Xu T, et al. Intelligent computing: the latest advances, challenges, and future[J]. Intelligent Computing, 2023, 2: 0006.

[5] Hu Y. Design and Implementation of an Environmental Monitoring System Based on Multimodal Sensors[C]//2025 4th International Symposium on Sensor Technology and Control (ISSTC). IEEE, 2025: 22-28.

[6] Li Y, Li Y, Tan H, et al. The Design of a Multi-functional Home Environment Detection System[C]//International Conference on Information, Computing and Technology. Cham: Springer Nature Switzerland, 2025: 315-325.

[7] Zhenghua X, Guolong C, Li H, et al. The Smart Home System based on the IAP15F2K61S2 and GSM[J]. International Journal On Smart Sensing and Intelligent Systems, 2014, 7(4): 1789-1806.

[8] Chew I, Kalavally V, Oo N W, et al. Design of an energy-saving controller for an intelligent LED lighting system[J]. Energy and Buildings, 2016, 120: 1-9.